OPTIMUM VIBE PROGRAMMABLE THERMOSTAT - USER INSTRUCTIONS

Touch-sensitive buttons:

Transmitter

switch on or off

PROG to programme

SET to select pre-set temperatures

increase / decrease temperature

back icon to go back

Receiver

operate the receiver manually

switch the receiver on or off

Temporary override using the UP and DOWN arrow icons.

Whilst in program mode (display shows PRG in the top-right) , you can adjust the set temperature by touching the UP or DOWN arrows. This is a temporary override of the current temperature setting. The display will change from showing 'ROOM' and the current measured temperature, to showing 'SET' and the temperature that you are now setting. Five seconds after you have changed the temperature to the value you want for the time-being, the thermostat will 'time-out' and once again show 'ROOM' and the measured temperature. The heating will be switched ON or OFF according to the adjustment you have made. The programmed time / temperature setting will be restored with the next program entry in the memory.

SET **Permanent override—manual mode using the SET icon**

In the program run mode, touch the SET icon briefly to choose between Program mode (**PRG**) or manual mode (sun symbol ☼). In manual mode you can set a different temperature from the programme. Manual mode is a permanent selection which will only change if you touch the SET icon again. Program mode (**PRG**) runs the programmed time & temperature sequence.

SET **Set the time & weekday:**

Insert the batteries with correct polarity. The screen will jump to time-setting mode. Or—during normal operation, touch the SET icon for 5 seconds to go into time-setting mode. Using the UP and DOWN arrow icons you can set the current time—you must also set the weekday. Whether you change a value or not, touch the SET icon to confirm and move on to the next setting. Go back to run mode by pressing ON/OFF or BACK, or the VIBE will 'time-out' to run mode after about ten seconds.

Transmitter and receiver display / controls

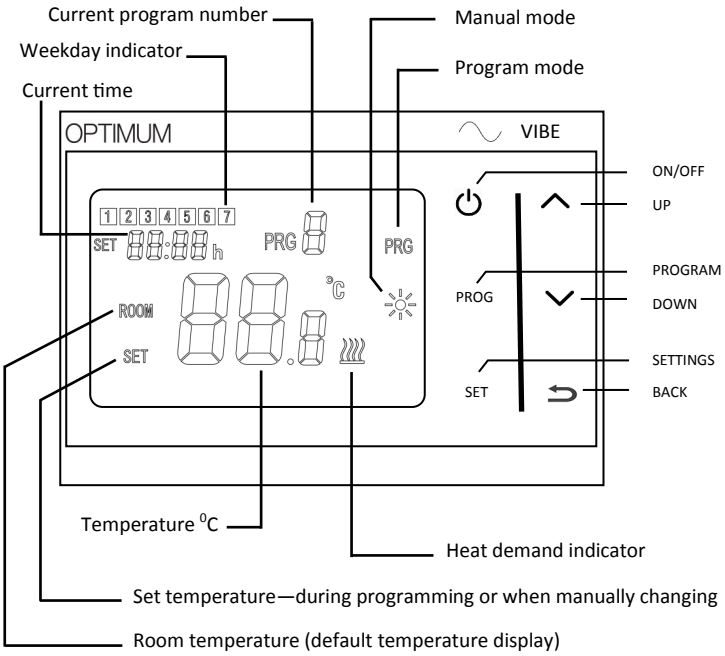

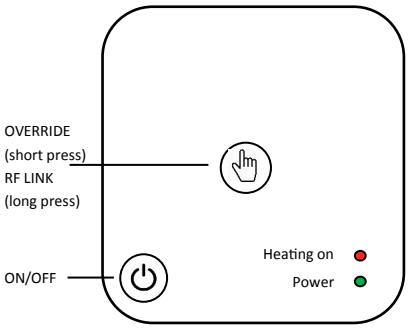

Programming: reviewing or changing the factory pre-set program:

The VIBE has a factory pre-set time and temperature sequence as shown in the table below:

	Monday to Friday					
Program	1	2	3	4	5	6
Time	06:00	08:00	12:00	13:00	16:30	22:00
Temp °C	20	15	15	15	20	5
	Saturday & Sunday					
Program	1	2	3	4	5	6
Time	06:30	08:30	12:00	13:00	16:30	22:30
Temp °C	21	15	18	15	21	5

PROG Touch the PROG icon for 5 seconds - the display will show the first program. You can confirm the time by touching the PROG icon again, or change in 15 minute increments by touching the UP or DOWN arrow icons. Touch the PROG icon to confirm, and then you will be viewing the temperature. Confirm by pressing the PROG icon, or change the value in 0.5^{0}C steps to the new required temperature by touching the UP or DOWN arrows. Touch PROG to confirm. You will then be viewing the second time / temperature program. Touch PROG to confirm, or change with the UP / DOWN arrow, and confirm with the program icon. If you want to create your own program, you must over-write the pre-set sequence. It helps to write down what you require first. A blank table is printed for your use below if required. After programming you can touch the ON/OFF or 'Back' icons to save and quit, or 10 seconds after the last button touch the VIBE will time-out to program mode. If whilst programming, you change a temperature value during the *current* program period, you can apply the changed temperature immediately after quitting programming, by touching SET - wait 30 seconds - then touch PROG.

	Monday to Friday					
Program	1	2	3	4	5	6
Time						
Temp °C						
	Saturday & Sunday					
Program	1	2	3	4	5	6
Time						
Temp °C						

Using the six available program spaces you can set a temperature profile to suit your personal schedule. An example is shown below. If you do not want a mid-day heating period, simply set programs 3 & 4 to the same temperature as program 2. If required, each timed period can be set to a different temperature.

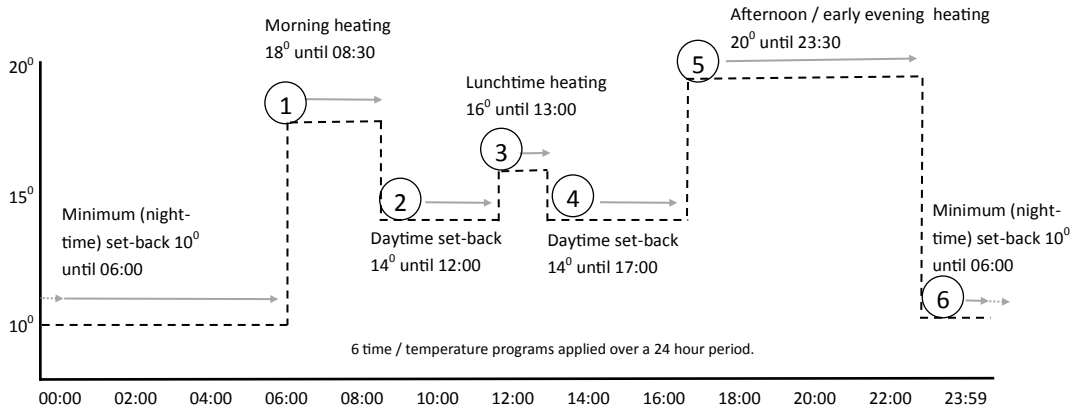

Parameter setting — how to configure the way your Optimum Vibe thermostat works: SET + ^

Configuration options should be set-up when the Vibe is first installed, but you can re-visit these settings if necessary.

To open the configuration menu, touch the transmitter ON/OFF button to turn the display off, then touch the SET and UP buttons simultaneously for 5 seconds:

You will be viewing the first of 15 options which can be configured to adjust the operation of the OPTIMUM VIBE, to best suit the installation and the user's requirements.

Touch the UP or DOWN arrows to adjust the parameter, and touch SET to move sequentially through the options. Changes will be saved by pressing the ON/OFF button. If no button is touched for 10 seconds, the display will 'time-out', but your changes will still be saved.

Option	Description	Range	Default value
01	Temperature calibration	-8^{0}C ~ +8^{0}C	0^{0}C
02	Maximum temperature setting	5^{0}C ~ 35^{0}C	35^{0}C
03	Minimum temperature setting	5^{0}C ~ 35^{0}C	5^{0}C
> 05	Frost-protection temperature	OFF; 5^{0}C ~ 15^{0}C	5^{0}C
09	Hysteresis (differential)	0.5^{0}C ~ 3.5^{0}C	0.5^{0}C
> 10	Display setting	0 ~ 1	0
17	Reset (reset all values to factory default)	Change to 1. Then touch Power button for 5 seconds	0
18	Firmware code	Non - adjustable *	5091
19	Firmware code	Non - adjustable *	0202
50	Backlight	0: OFF 1: AUTO	1
> 51	Programme mode	76: 7 days / 6 periods 526: Weekday / Weekend / 6 periods	526
> 52	Temperature regulation mode	NOr: Normal (ON/OFF) OPs: Optimum Start tPi: Time Proportional / Integral	NOr
> 53	Time interval for Ops	10 min, 15 min, 20 min	20 min
> 54	Number of heating cycles per hour (for TPi)	Range: 2 ~ 3 ~ 6 ~ 12	6
> 55	Proportional Bandwidth (for TPi)	Range: 1.5^{0}C— 3^{0}C	2^{0}C

>	See additional notes about these configuration options on Page 4
*	Firmware is pre-loaded in the factory, and visible for reference but cannot be changed. Firmware versions correct at time of going to press

Configuration options—additional notes:

Option	Description
05	If you set a frost-protection temperature, the heating will be switched on when the measured temperature falls below this level, even if the thermostat has been turned off.
10	0 (default) shows Set and Room temperatures. Setting 1 shows Set temperature only.
51	76—every day can be set with a different 6-stage programme 526—two 6-stage programme sequences can be set, one for weekdays, one for weekends
52	Please read 'how it works' for a full explanation of temperature regulation modes
53	For Optimum Start regulation. For best function, the time interval selected should equal the time taken to increase the room temperature by 1 degree.
54	For TPi regulation. Select a low number for fast-acting systems, and a high number for slow-acting systems
55	For TPi regulation. Sets the temperature below the set-point at which TPi control will begin

Low Battery Indication

In normal use, the batteries should last for 12—18 months. 'Normal use' allows for one user interaction per day—frequent use of the backlight will drain the batteries more quickly. When the batteries need to be replaced, the display will alternate between LO bAt and the normal display every 30 seconds. After changing the batteries, your programming and configuration settings are saved, but you will need to input the time and weekday. The screen will jump to time-setting mode. Use the UP or DOWN arrows to adjust the minutes, hours and weekday. Confirm each setting by touching the SET icon. When you have completed setting, touch the ON/OFF or BACK icons to return to normal run mode.

Refresh RF link

Press and hold the receiver's centre override button until the Heating on LED flashes rapidly. Release the button ensuring the LED is still flashing.

Now turn off the transmitter by touching the transmitter ON/OFF icon. The display will go blank.

Now touch the SET icon for 5 seconds. A four-character code will show in the top left, and a 0 . Release and then touch the SET icon once more. The 0 will change to 1. The receiver LED will stop flashing and the RF link has been refreshed. Turn on the transmitter by touching the ON/OFF icon, to bring the VIBE back into service.

Receiver ON / OFF

You can disable the heating by turning off the receiver. The receiver's output will switch off, and it will stop responding to signals from the transmitter.

Transmitter ON / OFF

You can save battery power on the transmitter, by touching the ON/OFF icon. The transmitter is powered-down and will stop sending control signals; the receiver will remain in it's current state (ON or OFF). If the receiver is powered-up you can control the output by pressing the override button.

Specification:

868 MHz radio frequency control set, with 4 character hexadecimal coding giving 65,536 code combinations.

Transmitter power 2 x AAA alkaline. Touch-screen keys. 70 x 40mm backlit LCD. Dimensions 120 x 85 x 22.5mm

Receiver power 230V AC, volt-free changeover 10A (resistive) switching, ON/OFF & manual override buttons. Dimensions 85 x 85 x 25mm. Wall-fixing centres 60mm.

Set control features: 20—30m range in buildings. ON/OFF, Optimising & TPI temperature regulation. Hysteresis +/- 0.5^{0}C. 5 & 2 or 7 day programming. 6 time / temperature periods. Temperature range 5—35 ^{0}C.

Boiler Plus compatible: Class IV control, 2% contribution to system efficiency

Approvals: CE - Radio Equipment Directive EN 2014/53/EU - RoHS

Do not dispose of this product with household waste - use local recycling facilities

QR058 Prepared for TFC Group by: J. Todd Issue 3: June 2019